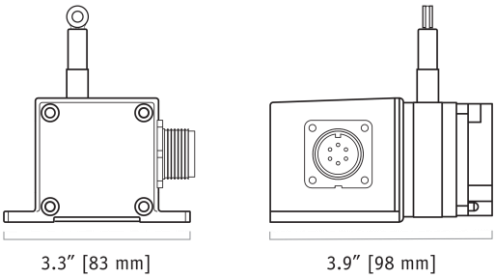

PT1A

Cable Actuated Sensor
Instrument Grade • Voltage Divider Output

Absolute Linear Position to 50 inches (1270 mm)

Aluminum and Polycarbonate Enclosure

Compact Design

IP65 • NEMA 4 Protection

The PT1A is perfect where space and money are limited. The PT1A is part of Celesco's compact line of cable-extension transducers. Using a high cycle plastic-hybrid potentiometer, the PT1A provides a precision voltage divider position feedback signal for full-scale measurement ranges from 2 to 50 inches.

The PT1A has many features to offer including 500 to 10K ohm potentiometer selection, adjustable bridge circuit and multiple measuring cable exit options.

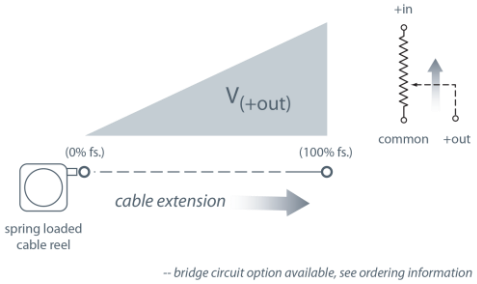

General

Full Stroke Range Options	0-2 to 0-50 inches
Output Signal Options	voltage divider (potentiometer)
Accuracy	± 0.25% to ± 0.15% full stroke (see ordering information)
Repeatability	± 0.02% full stroke
Resolution	essentially infinite
Measuring Cable	.019-in. dia. nylon-coated stainless steel
Enclosure	glass-filled polycarbonate and black anodized aluminum
Sensor	plastic-hybrid precision potentiometer
Potentiometer Cycle Life	see ordering information
Maximum Retraction Acceleration	see ordering information
Weight	1 lb. max.

Electrical

Input Resistance Options	see ordering information
Power Rating, Watt	see ordering information
Recommended Maximum Input Voltage	see ordering information
Output Signal Change Over Full Stroke Range	94% ±4% of input voltage

Environmental

Enclosure	NEMA 4, IP 65
Operating Temperature	-40° to 200°F (-40° to 90°C)
Vibration	up to 10 g to 2000 Hz maximum

LUNITEK

LUNITEK srl
via Variante Aurelia 115 Bis
19038 SARZANA (SP) ITALY
CF/P.IVA 01107260117

tel. +39 0187 692070
fax +39 0187 622339
www.lunitek.it
info.sarzana@lunitek.it

Azienda con sistema di gestione certificato Nr. 5010011753 secondo la norma UNI EN ISO 9001

Outline Drawing

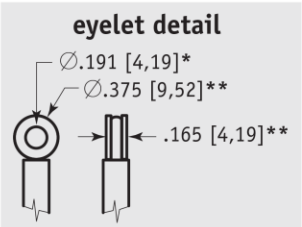

Range	A
2, 10	1.04 [26,4]
5, 25, 50	0.58 [14,7]
15, 30	0.82 [20,8]
20, 40	0.74 [18,8]

inches [mm]

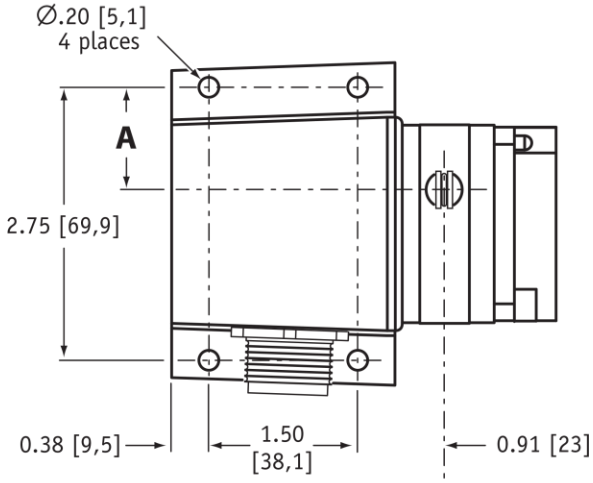

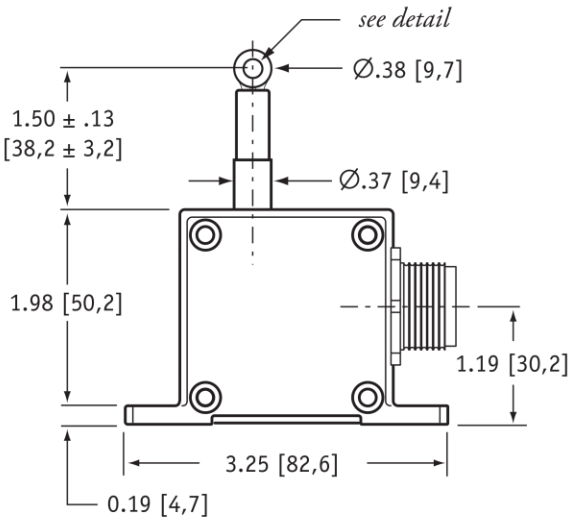

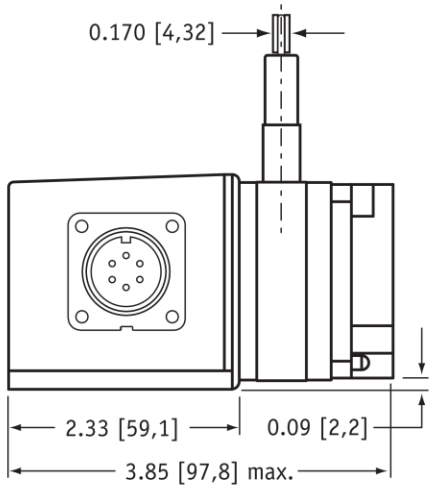

DIMENSIONS ARE IN INCHES [MM]
tolerances are 0.03 IN. [0.5 MM] unless otherwise noted.

* tolerance = +.005 –.001 [+.13 –.03]
** tolerance = +.005 –.005 [+.13 –.13]

Ordering Information

Model Number:

PT1A - _____ - _____ - _____ - _____ - _____
order code: Ⓡ Ⓐ Ⓑ Ⓒ Ⓓ

Sample Model Number:

PT1A - 30 - UP - 500 - MC4 - SG

Ⓡ	range:	30 inches
Ⓐ	measuring cable exit:	up
Ⓑ	output signal:	500-ohm pot.
Ⓒ	electrical connection:	4-pin micro connector
Ⓓ	cable guide:	spring-loaded guide

Full Stroke Range:

Ⓡ *order code:*	2	5	10	15	20	25	30	40	50
full stroke range, min:	2 in.	5 in.	10 in.	15 in.	20 in.	25 in.	30 in.	40 in.	50 in.
accuracy (% of f.s.):	0.25%		0.15%				0.10%		
potentiometer cycle life:	2,500,000 cycles		500,000 cycles				250,000 cycles		
cable tension (20%):	12 oz.	5 oz.	12 oz.	9 oz.	6 oz.	5 oz.	9 oz.	6 oz.	5 oz.
max. cable acceleration:	11 g	3 g	11 g	5 g	4 g	3 g	5 g	4 g	3 g

Cable Exit:

Ⓐ order code:	UP	DN	FR	BK
direction:	up	down	front	back

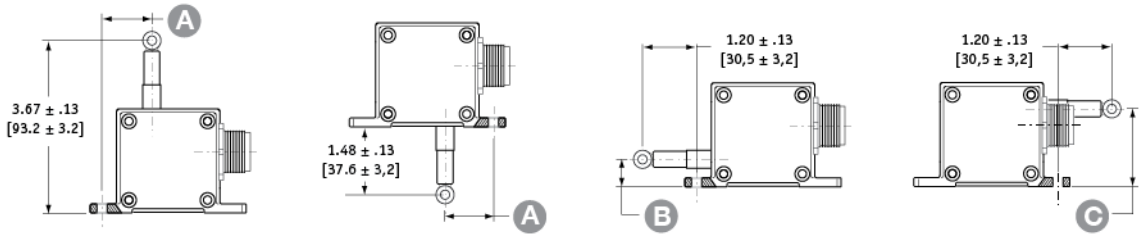

measurement range —	2	5	10	15	20	25	30	40	50
A	1.04 in. 26,4 mm	0.58 in. 14,7 mm	1.04 in. 26,4 mm	0.82 in. 20,8 mm	0.74 in. 18,8 mm	0.58 in. 14,7 mm	0.82 in. 20,8 mm	0.74 in. 18,8 mm	0.58 in. 14,7 mm
B	0.75 in. 19,1 mm	0.29 in. 6,1 mm	0.75 in. 19,1 mm	0.53 in. 13,5 mm	0.45 in. 11,5 mm	0.29 in. 6,1 mm	0.53 in. 13,5 mm	0.45 in. 11,5 mm	0.29 in. 6,1 mm
C	1.43 in. 36,3 mm	1.89 in. 48,0 mm	1.43 in. 36,3 mm	1.65 in. 41,9 mm	1.73 in. 43,9 mm	1.89 in. 48,0 mm	1.65 in. 41,9 mm	1.73 in. 43,9 mm	1.89 in. 48,0 mm

Output Signals:

Ⓑ order code:	500	1K	5K	10K	AB
	500 ohm*	1000 ohm*	5000 ohm*	10,000 ohm*	adjustable bridge (0...30 mV/V)

**tolerance = ±10%*

max. input voltage and power rating, options: 500, 1K, 5K, 10K

	2-inch, 5-inch range	*10-inch to 50-inch range*
500-ohms:	20 V AC/DC (1 W)	30 V AC/DC (2 W)
1K to 10K-ohms:	30 V AC/DC (1 W)	30 V AC/DC (2 W)

circuit options: 500, 1K, 5K, 10K

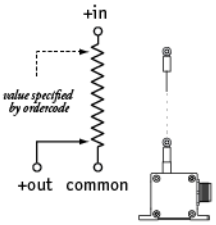

circuit option: AB (adjustable bridge)

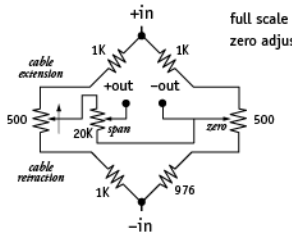

full scale output: adjustable from 0 to 30mV/V
zero adjust: to 50% of full stroke

Electrical Connection:

Ⓒ order code:	MC4	M6	C25
	4-pin micro-connector with 12 ft [3.5 M] cordset	6-pin plastic connector with mating plug	25-ft. instrumentation cable 24 AWG, shielded

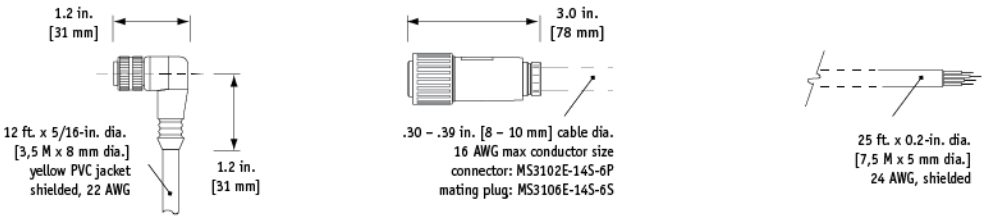

4-pin mating plug and cord set:

contact view

pin	color code	standard	bridge
1	RED-BLK TR.	+IN	+IN
2	RED-WHT TR.	COMMON	-IN
3	RED	+OUT	+OUT
4	GREEN	-	-OUT

6-pin mating plug:

contact view

pin	standard	bridge
A	+IN	+IN
B	COMMON	-IN
C	+OUT	-OUT
D	-	+OUT

25-ft. cable:

color code	standard	bridge
RED	+IN	+IN
BLACK	COMMON	-IN
GREEN	+OUT	+OUT
WHITE	-	-OUT

Cable Guide:

⓫ order code:	blank	SG
	standard cable guide	spring-loaded guide
		cable-guide cushions impact from accidental free release

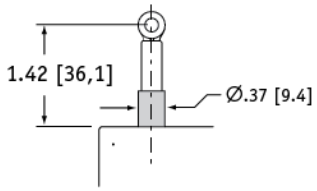

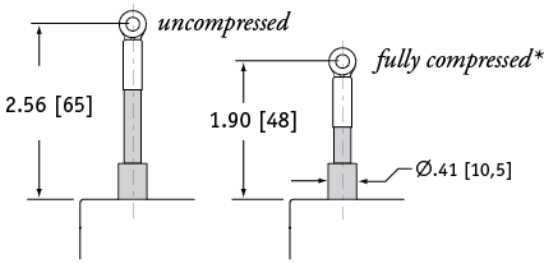

**note: start of full stroke range begins at full compression point (except 2-inch and 5-inch ranges).*